SITE FIXING DRAWING APPROVAL CHECK
SIGNED: DATE:
PRINT:
N.B ANY DISCREPANCIES TO BE MARKED ON DRAWING AND REPORTED IMMEDIATELY TO OFFICE

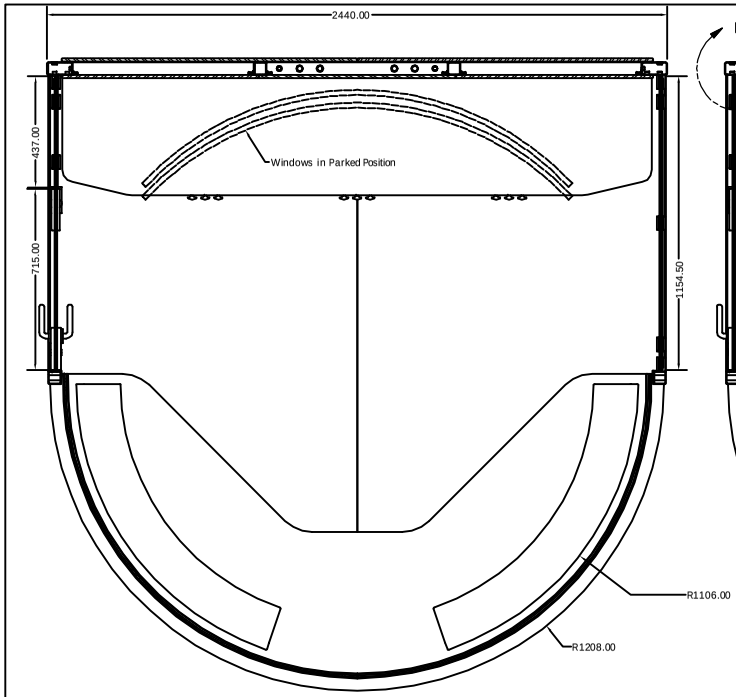

SECTION A-A
SCALE 1/10

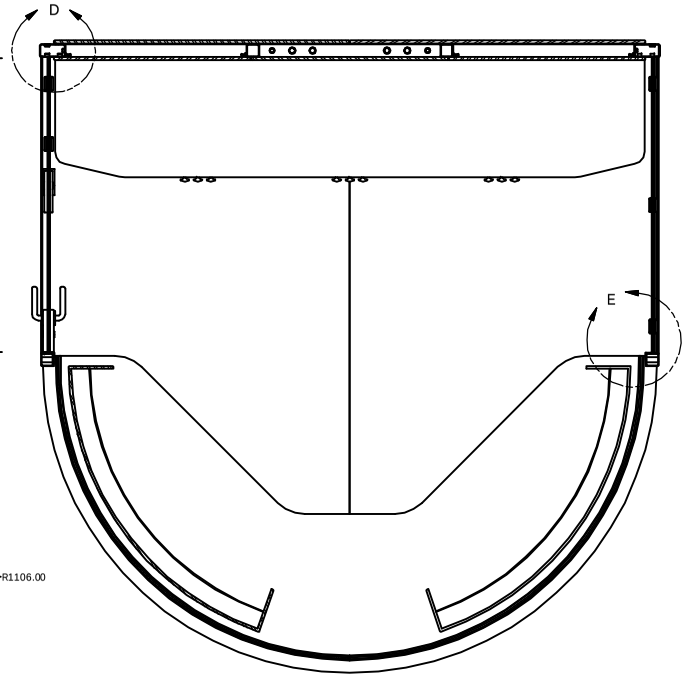

SECTION B-B
SCALE 1/10

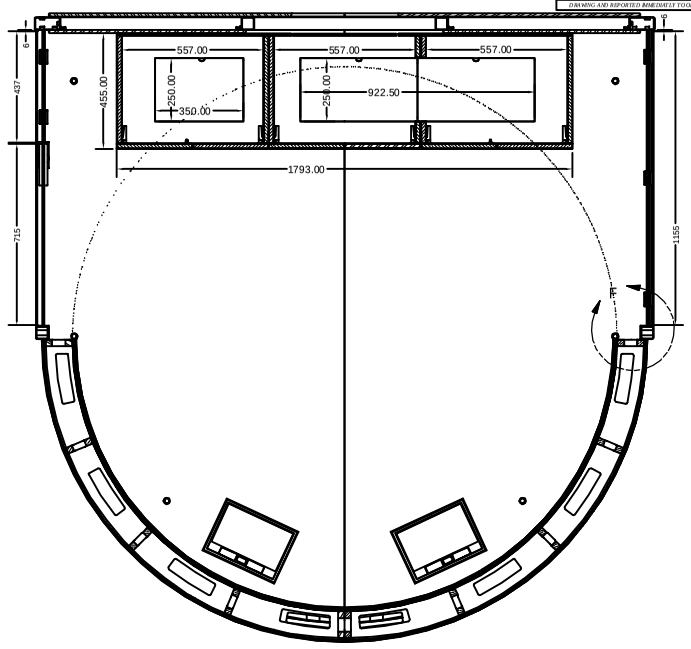

SECTION C-C
SCALE 1/10

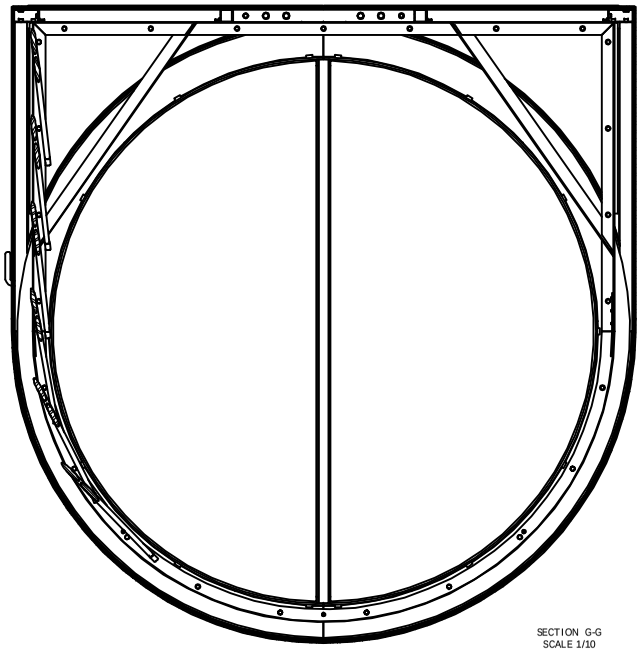

SECTION G-G
SCALE 1/10

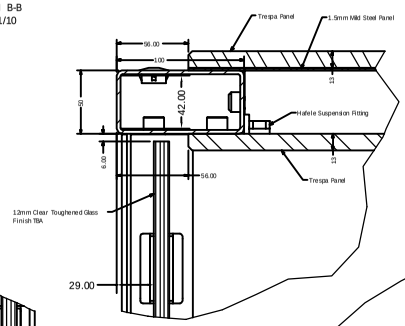

DETAIL D
SCALE 1 / 2

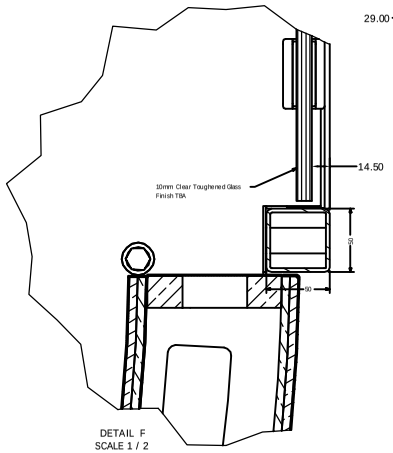

DETAIL F
SCALE 1 / 2

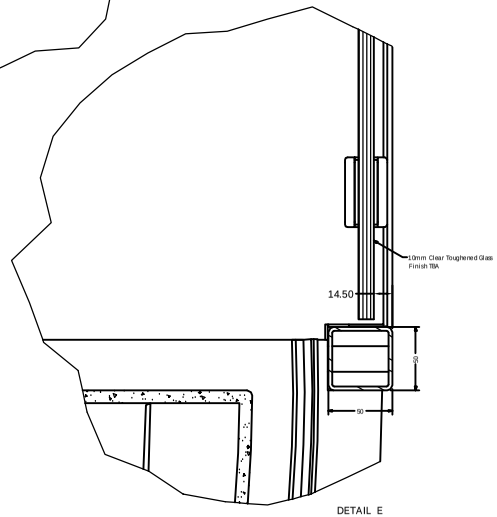

DETAIL E
SCALE 1 / 2

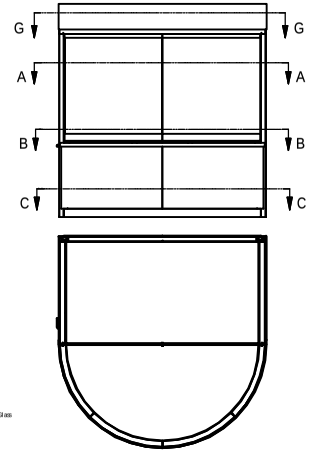

Solid Timber

MDF+Veneer

MDF

PLYWOOD

CONTRACT ADDRESS
Network Rail
Revision A-04/02/07
Revision B-10/02/07
Revision C-19/04/07
Information Point
GA Horizontal Sections Views

WASHROOM WASHROOM LTD
THE LOUGHTON SEEDBED CENTRE
LANGSTON ROAD
LOUGHTON, ESSEX
IG10 3TQ
TEL.....0700 492 7476
FAX.....0700 492 7476
E-MAIL : info@washroom.co.uk

© This drawing may not be reproduced in whole or in part without prior consent.

DATE : 12/03/07 | DRAWN BY : RD
SCALE : As Detailed@A1 | CHECKED BY :
DWG.No. WW/ NW-002